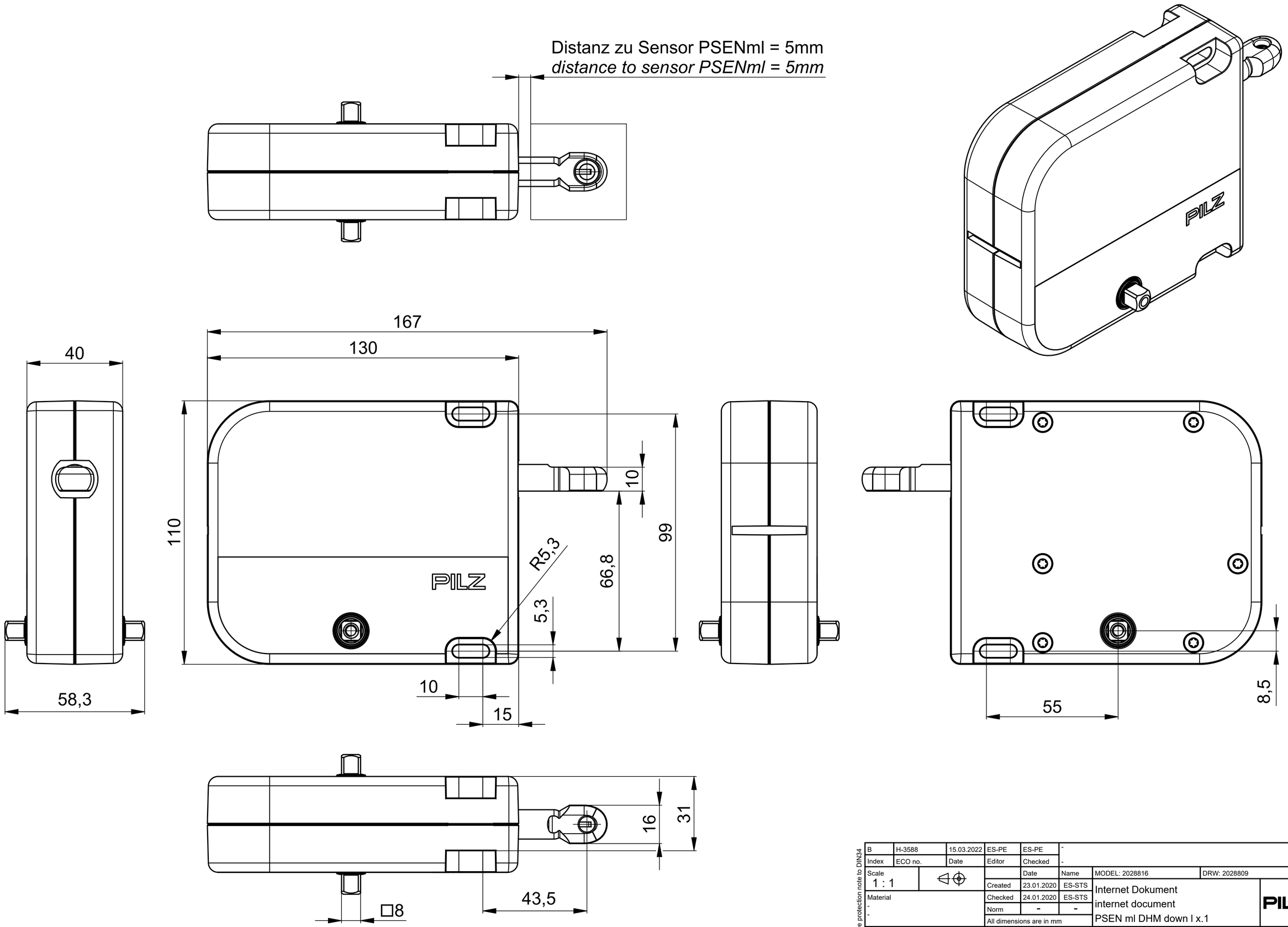

B	H-3588	15.03.2022	ES-PE	ES-PE	-		
Index	ECO no.	Date	Editor	Checked	-		
Scale 1 : 1				Date	Name	MODEL: 2028816	DRW: 2028809
			Created	23.01.2020	ES-STS	Internet Dokument internet document PSEN ml DHM down I x.1	PILZ
Material - -			Checked	24.01.2020	ES-STS		
			Norm	-	-		
			All dimensions are in mm				
Surface - -			Unspecified tolerance			Doc.-No. 2028809	Page 1
						Mat.-No. -	of 1

Observe protection note to DIN34