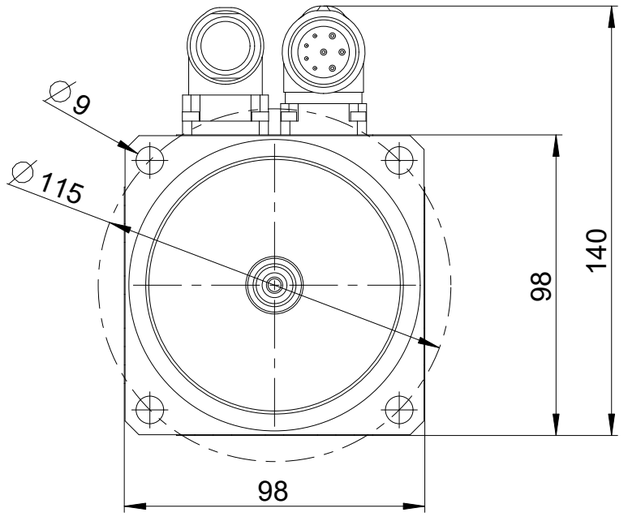

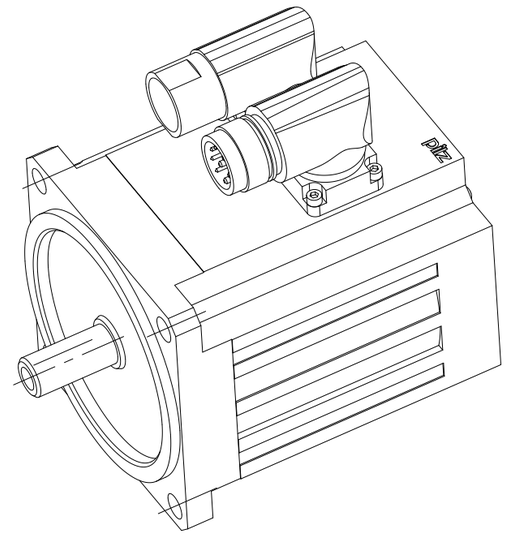

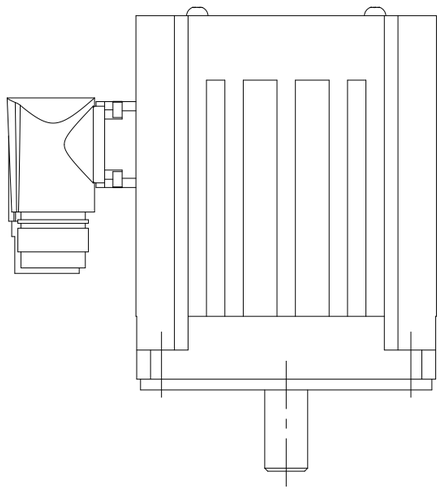

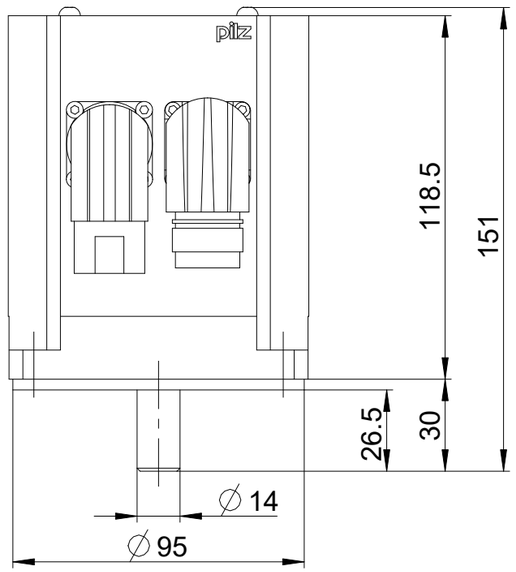

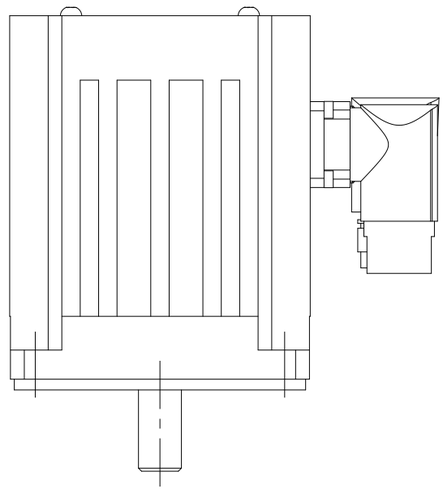

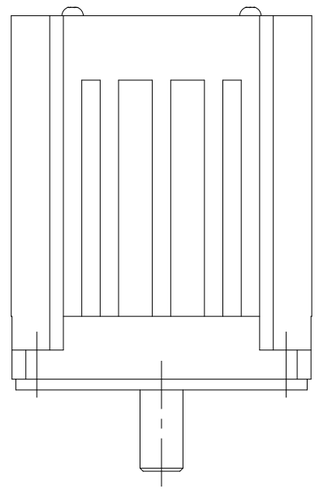

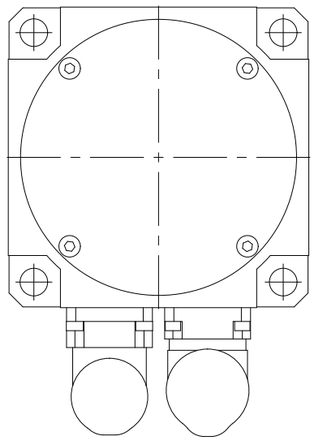

Refer to protection notice ISO 16016

-	20210167	27.08.2021	PD-SUP-MD	PD-SUP-MD	Neue Zeichnung new drawing
Index	ECO no.	Date	Editor	Checked	

Scale 1:2		Date	Name	MODEL: 2031360 / DRW: 2031361
	Created	27.08.2021	PD-SUP-MD	Internet Dokument Internet document MotEZ_401_UDAPC5O
Material - -	Checked	27.08.2021	PD-SUP-MD	
	Norm	-	-	
	All dimensions are in mm			
Surface - -	Unspecified tolerance ISO 2768 - mH			Doc.-No. 2031361 / Page 1
				Mat.-No. 8G000006 / of 1

PILZ